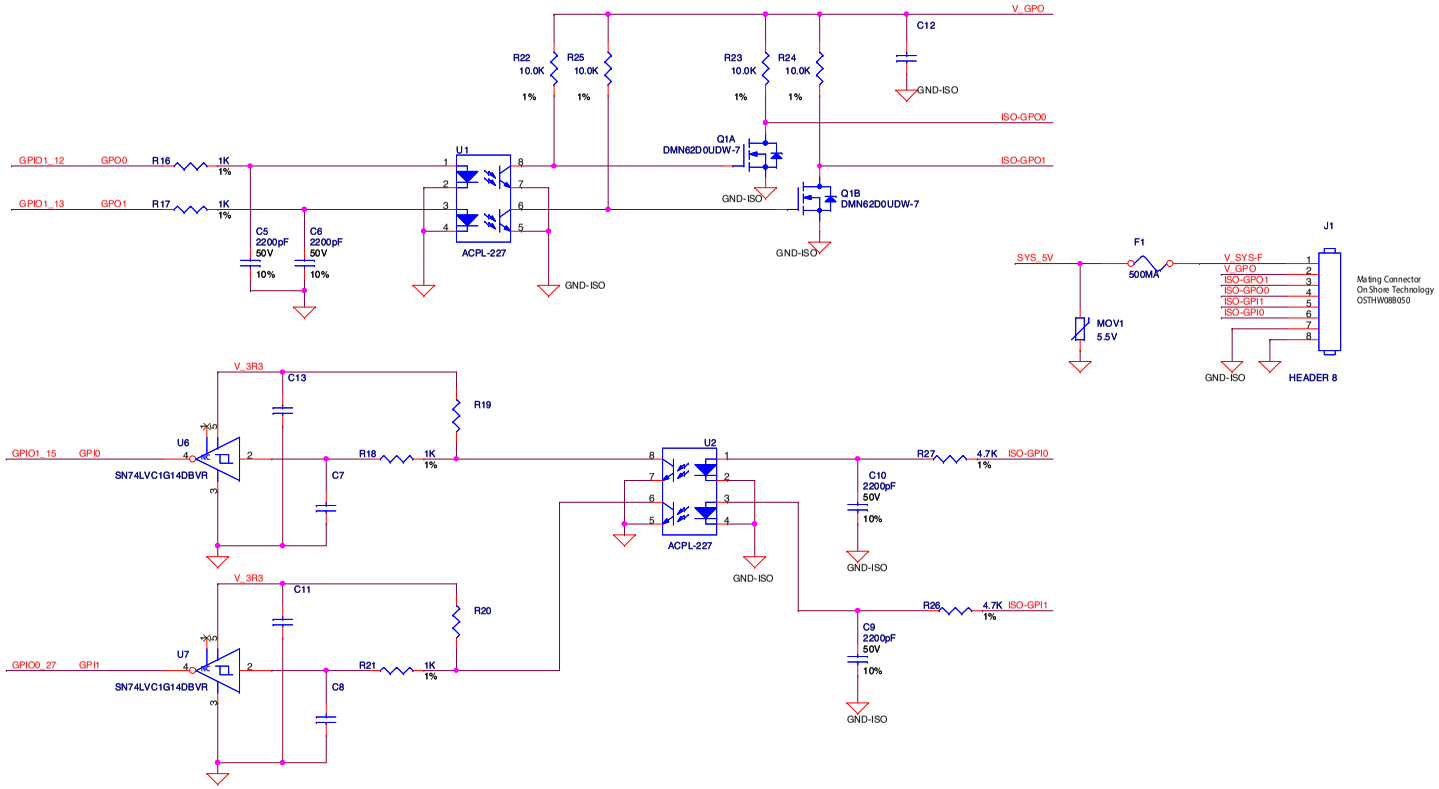

Item\tQty\tReference\tPart\t% Tol\tTM-P/N\tMFR1\tMF
{Item}\t{Quantity}\t{Reference}\t{Value}\t{TOLERANC

R1-P/N\tPrice-100

ThingMagic, A Division of Trimble Navigation

Woburn, MA 01801

Title

Sargas GPIO Schematic

Size	Document Number	Rev
A	435-0087-01	C

Date: Tuesday, March 08, 2016 Sheet 1 of 1